M-1 APPLICATION TO THE BOTTOM AND SCARF JOINTS OF CHEMCURB SECTIONS

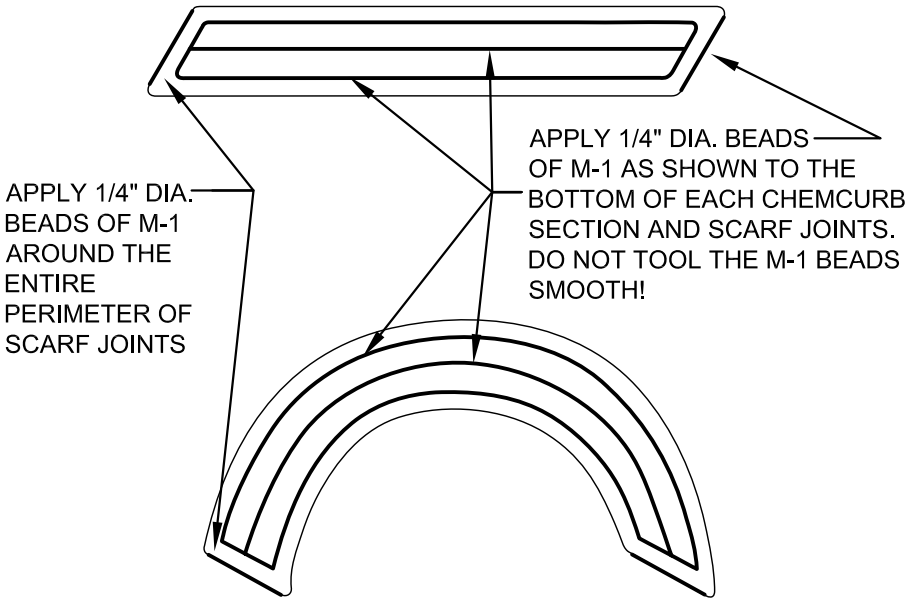

STANDARD CHEMCURB DETAIL

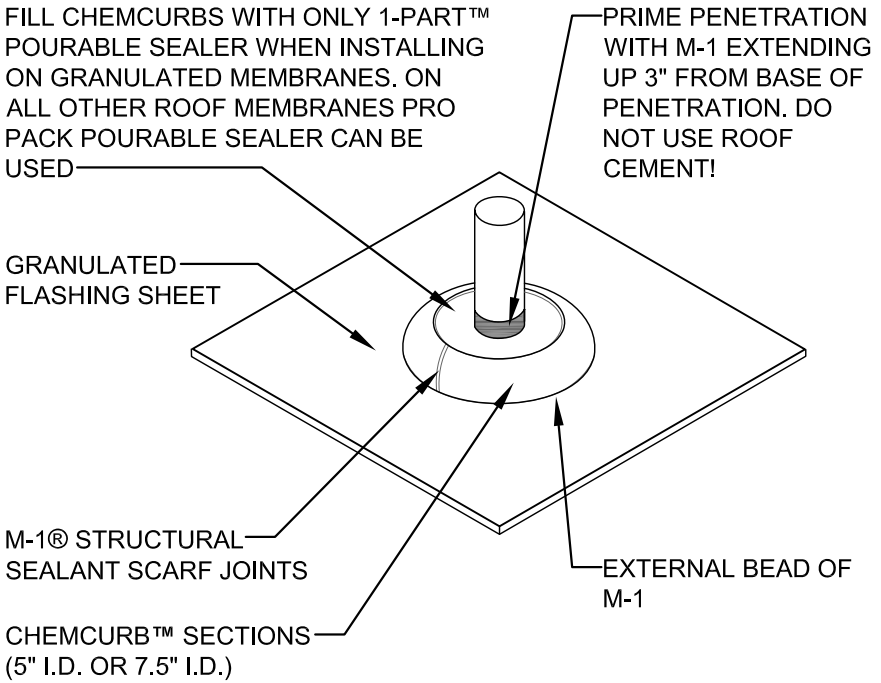

A MINIMUM 1" SPACE IS REQUIRED BETWEEN ALL PENETRATIONS AND THE INTERIOR WALL OF ALL CHEMCURBS.

This detail is furnished "as is" and "as available" and for information only and as a guide for use in conjunction with U.S. Ply products with applicable construction conditions. All dimensions shown are sheet specific; do not scale off of drawing. All details must be checked by the user's designer, architect or engineer to ensure that design is adequate for intended use. Any alterations made to this detail become the design of the user and shall neither be assumed nor construed as U.S. Ply's design. U.S. Ply will not be liable for damages of any kind arising from the use of this website, and/or details, including direct, indirect, incidental, consequential and punitive damages.

U.S. PLY, INC.

Pioneered with performance in mind... Engineered to stand the test of time.

TITLE:

CHEMCURB™ ROOF PENETRATION DETAIL

DATE: **05-14-2004**	SCALE: **N.T.S.**
REVISIONS: **01-31-2011**	**BUR-20**